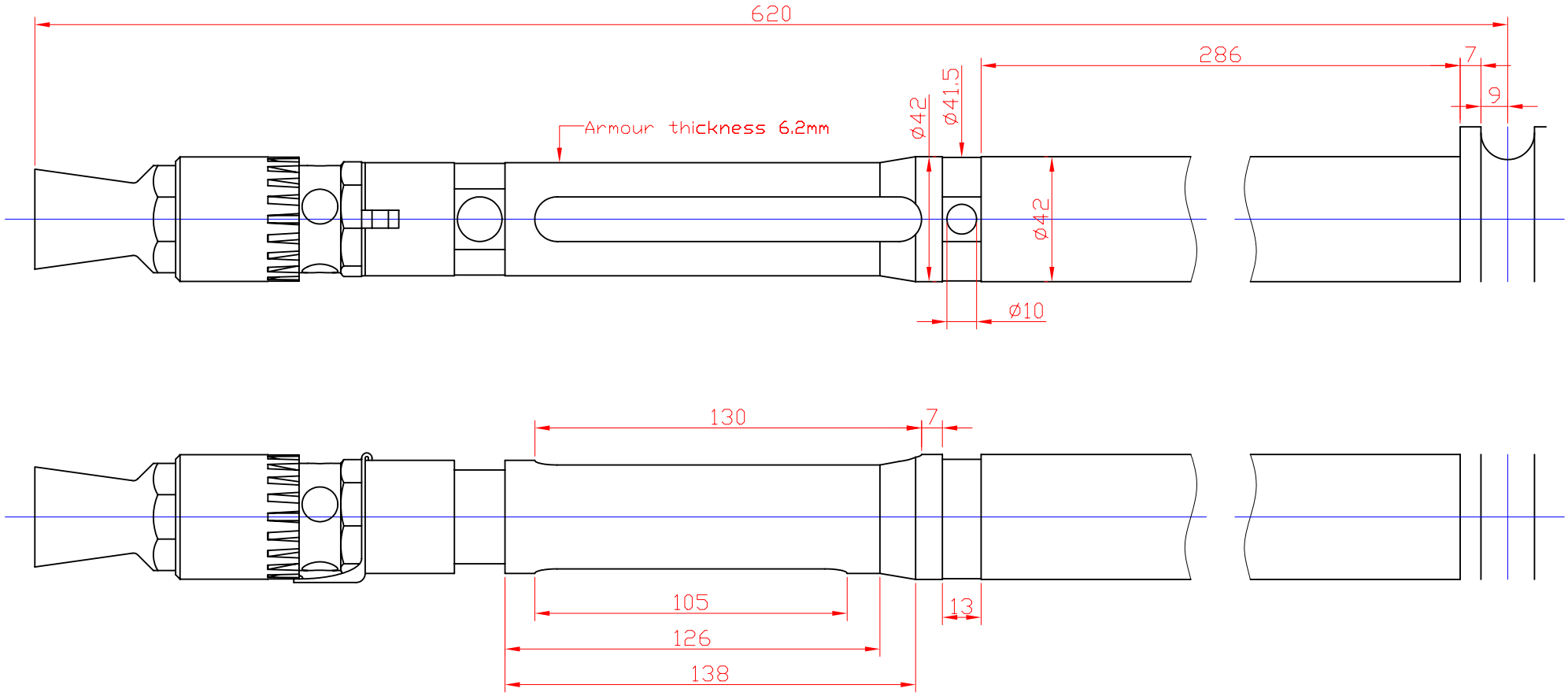

Name: MG34 Barrel	
Scale: 1/2	NR: 06062701
Project: Big Scale Tiger1 Model	Author: Rob Veenendaal